Kyland Technology Co., Ltd.

White Paper

IEC61850 Modeling for Switch Management

IEC61850 Modeling for Switch Management

Keywords: IEC61850, ZSWM, ZSWP

Abstract: The IEC61850 Modeling technology can be used to manage industrial Ethernet switches based on IEC61850 protocols. This white paper describes the models and typical applications of the technology.

Acronyms:

Acronym	Full Spelling
ICD	IED Capability Description
LD	Logical Device
LN	Logical Node
ACSI	Abstract Communication Service Interface
SCSM	Specific Communication Service Mapping
MMS	Manufacturing Message Standard

1 Overview

IEC61850 has become the international standard for Substation Automation System (SAS). The concept of the technology is extended to many other fields such as the wind power industry where the technology has broad application prospects.

IEC61850 is characterized by:

1) Object-oriented modeling;

2) ACSI;

3) Real-time services;

4) Configuration language;

5) Unified modeling for the entire power system.

The self-describing feature helps to greatly lower data management costs, simplify data maintenance, and reduce system downtime caused by incorrect configuration. As the foundation of the remote seamless communication system for power systems, IEC61850 significantly improves the data integration of information and automation technology devices, reduces project volume, expenses on onsite acceptance, operation, monitoring, diagnosis, and maintenance, and a large amount of time, as well as increases the flexibility of automation systems during operation. IEC61850 ameliorates the interoperability and protocol conversion of automation system products for substations. Moreover, IEC61850 equips substation automation devices with self-describing, self-diagnosis, and Plug and Play features, facilitating system integration and reducing project expenses on substation automation systems. In China, IEC61850 dramatically improves the technology and secure operation of substation automation systems and reduces human and material resources for development, acceptance, and maintenance, achieving complete interoperability.

In the development of IEC61850, Ethernet switches constitute the communication platform between process layer and substation layer networks. IEC61850 does not take Ethernet switches as devices. However, the monitoring, management, and configuration of Ethernet switches will be gradually incorporated into the entire system in actual applications, which is required by running the system normally, fault diagnosis and alarming.

The following figure shows the application model of Ethernet switches in a smart grid. The Ethernet switches are applied in the process layer network and substation layer network.

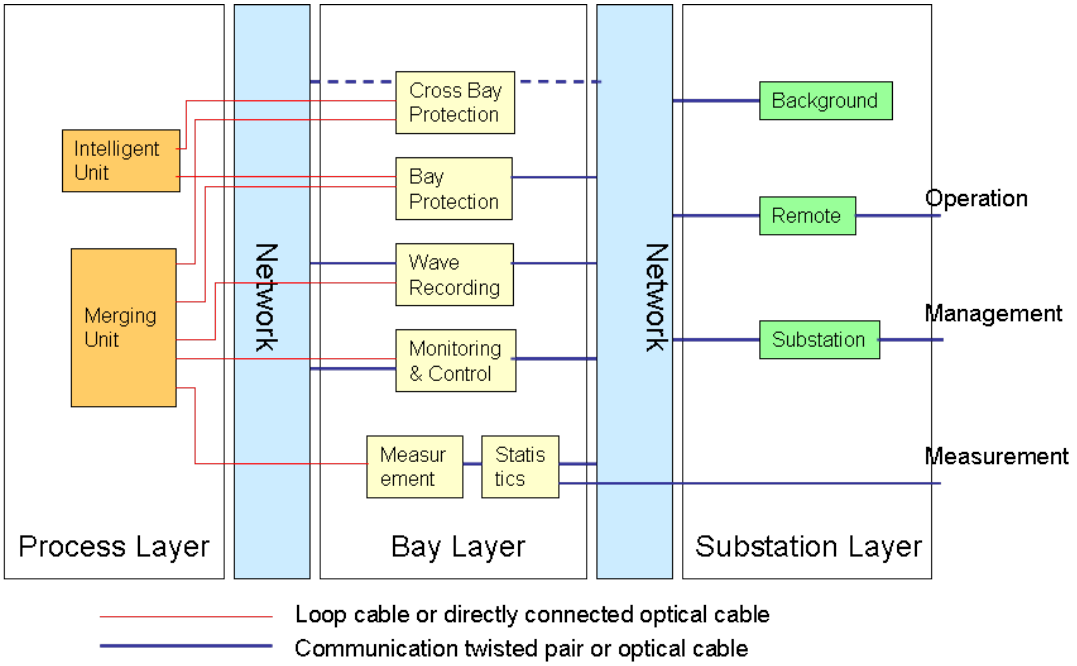

The existing switch management mode, regardless of EMS or OPC server, is within the substation system, thus posing certain restrictions on use. Switches at the process layer are separated from those at the substation layer. Therefore, switches at the process layer cannot be managed and the monitoring status of these switches cannot be reported to the remote management system (provincial NMS). As a result, additional servers are required, increasing the burden on customers.

IEC61850-based modeling for industrial Ethernet switches solves the problem perfectly.

The IEC61850 protocol stack models are the most widely used with public devices and components in actual applications. These models define the common data format, identifiers, behaviors, and control for substations and feeder devices (for example, breakers, voltage regulators, and relays), but no model is defined for industrial Ethernet switches.

1.1 Background

With the construction of intelligent substations, Ethernet switches become the unique and key communication platform in substations. Therefore, the management and maintenance of switches will play a critical role in substation operation in the future.

Moreover, the configuration of switches is complicated but closely related to various substation services. Therefore, it is necessary to develop object-oriented configuration and management models as well as configuration software.

Currently, SNMP is used for managing industrial Ethernet switches, but as the basic management mode in telecommunications, SNMP does not suit the object-oriented management mode of industrial platform such as a smart grid and cannot be incorporated into the management system of a smart grid. Therefore, developing IEC61850-based industrial Ethernet switches management model is one of the key technologies for convenient management of a smart grid.

This can be achieved by protocol conversion of IEC61850. The design architecture is as follows:

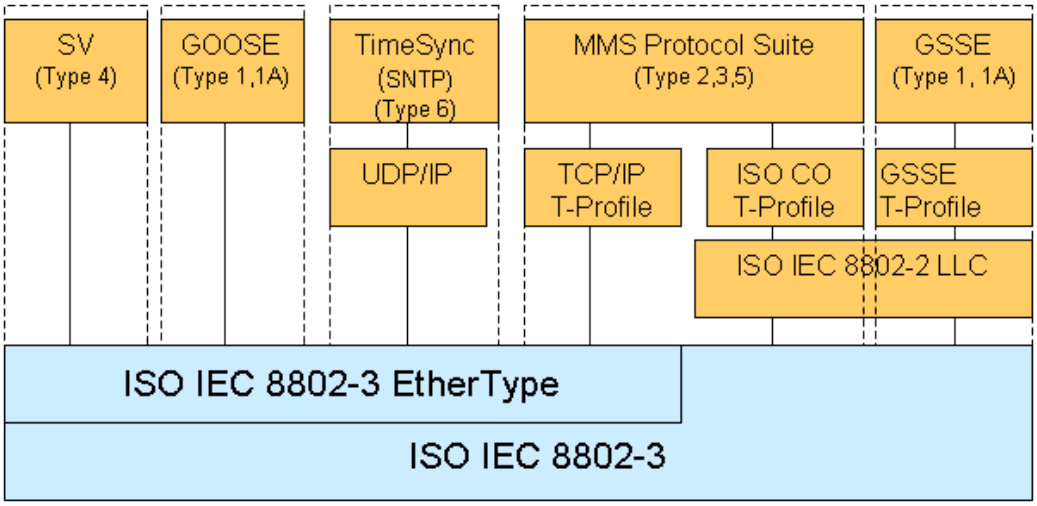

To be specific, different packets of Ethernet switches are converted to IEC61850 packets for management. The substation layer adopts MMS packets. Devices convert their own information to MMS packets and send these packets to the substation layer.

1.2 Highlights

- Unified management of switches on the process layer and substation layer networks for intelligent substations.
- No additional devices or training on the knowledge of switches for the maintenance personnel of intelligent substations.
- No development on background. Only configuration is required for management due to the self-describing feature of IEC61850.

- Transition to no manual intervention in intelligent substations. Status and alarm information is collected accurately and reported to the remote management system (provincial NMS).
- Automatic configuration, simplifying maintenance and management of switches.

2 Technology Implementation

2.1 Concepts

Conceptual Modeling Approach

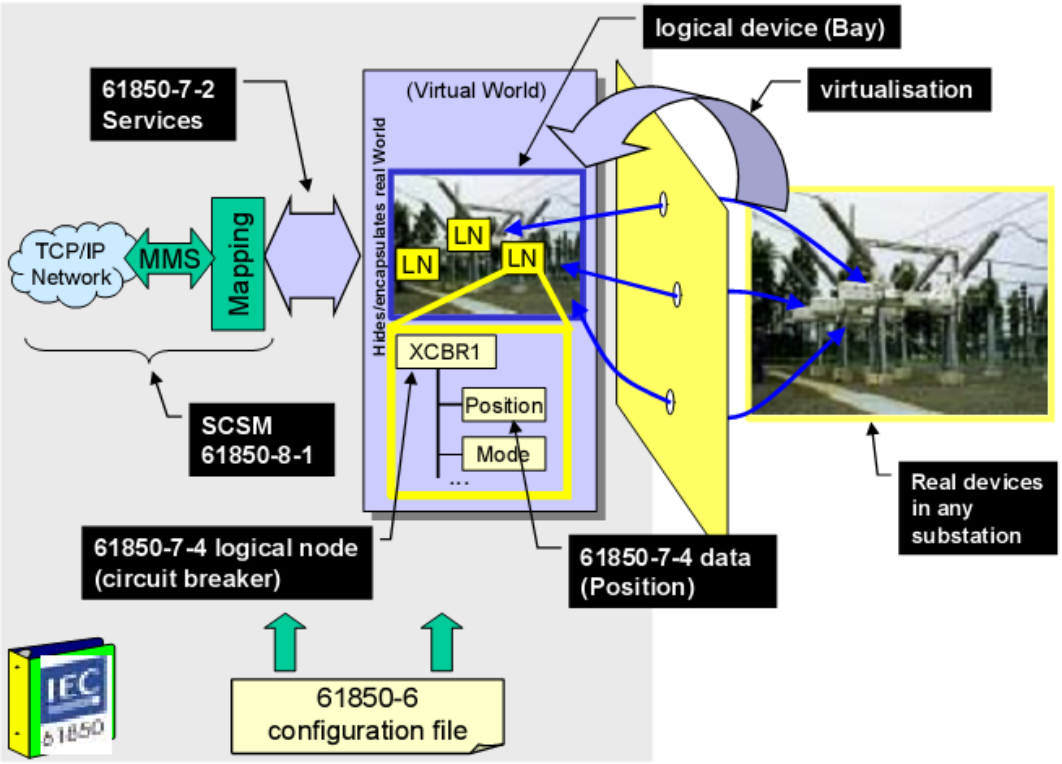

The IEC61850 protocol stack virtualizes actual devices and functions into hierarchical data structures by information modeling, and performs certain functions by data exchange with the ACSI between different communication entities. Mapping between different communication protocols is implemented through SCSM, achieving maximum compatibility and avoiding impacts imposed by the development of communication protocol stacks. At the system level, configuration language is standardized to achieve automatic maintenance and easy integration.

Server

A server is the communication entity of the IED. It accesses the data objects of LD and LNs on the server through the communication system (AP).

Logical Device (LD)

An LD is a set of one or multiple LNs on the server of an IED.

Logical Node (LN)

An LN is the smallest part of a function that exchanges data. It is an object defined by its data and methods. It indicates a certain function of a physical device and certain operations for executing the function. Substation automation system devices perform the substation automation function through LNs. An IED usually communicates with other IEDs through the communication system. In the communication system, APs are used to connect IEDs to communication subnets.

The LD of an IED contains an LN. The provided data object (server capability) is described in SCL. The required data object (LN user side) is related to the function implementation and determined by the configuration tool of the IED.

IED Capability Description (ICD)

An ICD is an XML-based SCL file with the extension of ".ICD". The file is the data exchanged between IED configuration tools and system tools. It describes the capability of the IED.

Abstract Communication Service Interface (ACSI)

An ACSI is a virtual interface to an IED providing abstract communication services, for example connection, variable access, unsolicited data transfer, device control and file transfer services, independent of the actual communication stack.

Specific Communication Service Mapping (SCSM)

The SCSM is the standardized procedure that provides the concrete mapping of ACSI services and objects onto a particular protocol stack/communication profile.

An SCSM should detail the mapping of ACSI objects into object supported by the application protocol.

Manufacturing Message Standard (MMS)

The MMS is a set of communication protocols used for industrial control systems defined in the ISO/IEC9506 standard. The MMS is a set of independent international packet standards for real-time data and monitoring information exchanged between computers or IEDs in the network environment of ISO TC184 development and maintenance. It is independent of application and device developers.

2.2 IEC61850 Modeling of Industrial Ethernet Switches

The model abstracts a physical device into a common logical node and describes the attributes of logical nodes. In the model, data sets include switch general alarm, general status, port alarm, and port status data sets. The model employs directory, data set, and report control block (BRCB, URCB) services to achieve convenient management over industrial Ethernet switches, improving the management efficiency of a smart grid.

The process for establishing the information model is as follows:

- ✓ Take the switch as a physical device in IEC61850 for better system management. Various running status of the device can be queried.
- ✓ LN0: It is independent of function implementation and only details the physical device. It complies with IEC61850 completely and does not need re-definition.
- ✓ Define the logical nodes of switches as follows:
- ✓ Provide traversal and association services.

The following figure shows the object-oriented management model for industrial Ethernet switches.

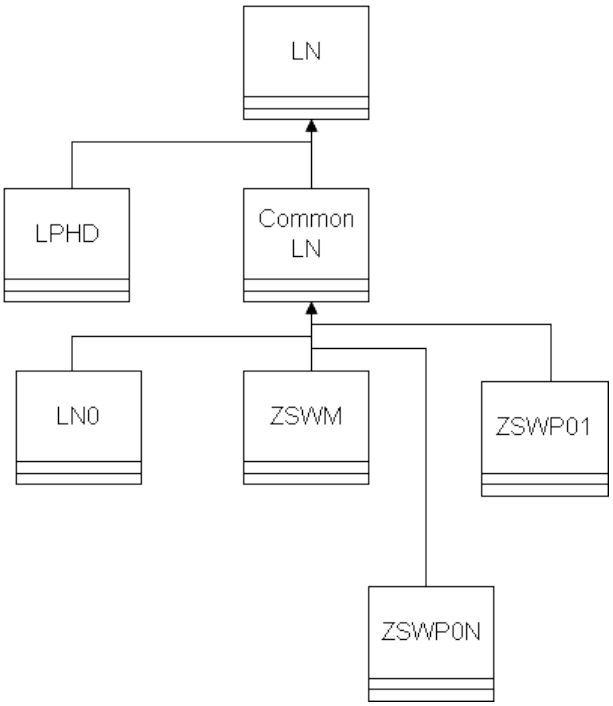

Figure 4 Object-oriented Management Model

LN

LN is the abstract logical node defined in the IEC-61850-7-2 standard. All the other logical nodes inherit the data from the LN directly or indirectly. The LPHD is a switch, which inherits the data of LN class, including the physical nameplate and health status of a switch.

- LPHD

LPHD class				
Attribute Name	**Attribute Type**	**Explanation**	**M/O/E**	**Notes**
LPHD		Physical device information	M	
Data				
Common Logical Node Information				
PhyNam	DPL	Physical device nameplate	M	
PhyHealth	INS	Physical device health	M	
OutOv	SPS	Output communications buffer overflow	O	
Proxy	SPS	Indicates if this LN is a proxy	M	

LN0 is a common logical node, independent of function implementation. It only details the physical device.

LLN0

LLN0 class				
Attribute Name	**Attribute Type**	**Explanation**	**M/O/E**	**Notes**
LLN0		Logical node zero		
Data				
Common Logical Node Information				
Mod	INC	Mode	M	Status-only
Beh	INS	Behavior	M	
Health	INS	Health	M	
NamPlt	LPL	Nameplate	M	

ZSWM is the switch management node, a general feature of a switch; ZSWP is the switch port management node, management and status information of a switch port.

Each device can have only one ZSWM instance.

ZSWM class				
Attribute Name	**Attribute Type**	**Explanation**	**M/O/E**	**Notes**
ZSWM		Switch management		
Data				
Common Logical Node Information				
Mod	INC	Mode	M	
Beh	INS	Behavior	M	
Health	INS	Health	M	
NamPlt	LPL	Nameplate	M	
Alarm Information				
TmpAlm	SPS	Temperature alarm	E	
IpAlm	SPS	IP address conflict alarm	E	
SupAlm	SPS	Power supply alarm	E	
Status Information				
Tms	INS	Up time	E	

Tmp	MV	Temperature	E	Degree Celsius
DSup	DPS	Double-power supply	E	0: all powers is OK, ALL_OK 1: if SupAlm is TRUE, power1 is abnormal; POWER1_ABNORMAL 2: if SupAlm is TRUE, power2 is abnomal;POWER2_ABNORMAL
ClkFlw	SPS	Is clock synchronized with the master?	E	
ClkSPortId	INS	PTP slave clock port id (which connected to the master clock)	E	255 if PTP is not enabled; Port index [1, max-port-id*] *max-port-id: depend on the device.
ClkMPortId	INS	PTP master clock port id	E	

ZSWP is based on port. Therefore, each device can contain multiple ZSWP instances.

PTOC class				
Attribute Name	**Attribute Type**	**Explanation**	**M/O/E**	**Notes**
ZSWP		Switch port		
Data				
Common Logical Node Information				
Mod	INC	Mode	M	
Beh	INS	Behavior	M	
Health	INS	Health	M	
NamPlt	LPL	Nameplate	M	
Alarm Information				
PortLinkSt	INS	Port link status	E	0: link-down 1:link-up
PortCrcAlmSt	SPS	Alarm for CRC packets received	E	
PortShortPktAlmSt	SPS	Alarm for short packets received	E	
PortLongPktAlmSt	SPS	Alarm for long packets received	E	
Status Information				
PortPtpSt	INS	Port IEC61588 state	E	PortPtpSt
PortAdSt	SPS	Port administrative status	E	true: administrative down

				false: administrative up
PortStpNum	INS	Port Span-tree state	E	0: disable 1: block 2: learning 3: forward
PortCsPktNum	INS	Number of collision packets	E	
PortCrcPktNum	INS	Number of CRC packets	E	
PortShortPktNum	INS	Number of short packets	E	
PortLongPktNum	INS	Number of long packets	E	
PortBCPktNum	INS	Number of broadcast packets	E	
PortMCPktNum	INS	Number of multicast packets	E	
PortRcvPktNum	INS	Number of total packets received	E	
PortRcvOctetNum	INS	Number of total octets received	E	

Service

GetServerDirectory;
GetLogicalDeviceDirectory;
GetLogicalNodeDirectory;
GetAllDataValues;
GetDataValues;
SetDataValues;
GetDataDirectory;
GetDataDefinition;
GetDataSetValue;
SetDataSetValue;
CreateDataSet;
DeleteDataSet;
GetDataSetDirectory;
Report;
GetBRCBValues;
SetBRCBValues;
GetURCBValues;
SetURCBValues;
TimeSynchronisation;

Configuration File

Configuration files describe the configuration and parameters of IEDs involved in communication, configuration of communication systems, switchyard (function) structure, and their relationships. File format is defined to exchange ICD with substation automation system description in a compatible way between the IED configuration tools and system configuration tools from different manufacturers.

IEC61850 involves the following configuration files:

- IED Capability Description (ICD): The file is provided by device manufacturer to system integration manufacturer. It describes the basic data models and services provided by the IED, excluding IED instance names and communication parameters. An ICD file shall contain model self-description information. For example, LD and LN instances should contain Chinese "desc" attribute, and DOI of universal models GAPC and GGIO instances should contain Chinese "desc" attribute. An ICD file shall also contain version revision information, including revision time and version numbers.
- System Specification Description (SSD): The DDS is unique in a substation. The file describes the primary system structure and correlated logical nodes of the substation. The SCD file contains the SSD file.
- Substation Configuration Description (SCD): The SCD is unique in a substation. The file describes the instance configuration and communication parameters of the IED, communication configurations between IEDs, and the primary system structure of the substation. The system integration manufacturer completes the file. An SCD file shall also contain version revision information, including revision time and version numbers.
- Configured IED Description (CID): Each device has one CID. The CID is generated by the device manufacturer based on the related configuration of a specific IED in the SCD file.

The four types of SCL configuration files enable the description and correlation of IED and SAS, realizing automatic update and remote configuration of IED and SAS. These SCL configuration files in a unified format greatly simplify system integration, management, and configuration.

The Substation Configuration description Language (SCL) is used to describe the configuration, function, and correlation of SAS and its automation devices. SCL follows the grammar rules of XML. The generated SCL file is a standard XML file. SCL complies with the semantic regulations defined in IEC61850.

In the modeling technology, industrial Ethernet switches are taken as IEDs with ICD files and can complete the configuration of CID files automatically.

2.3 Implementation

Overall Architecture

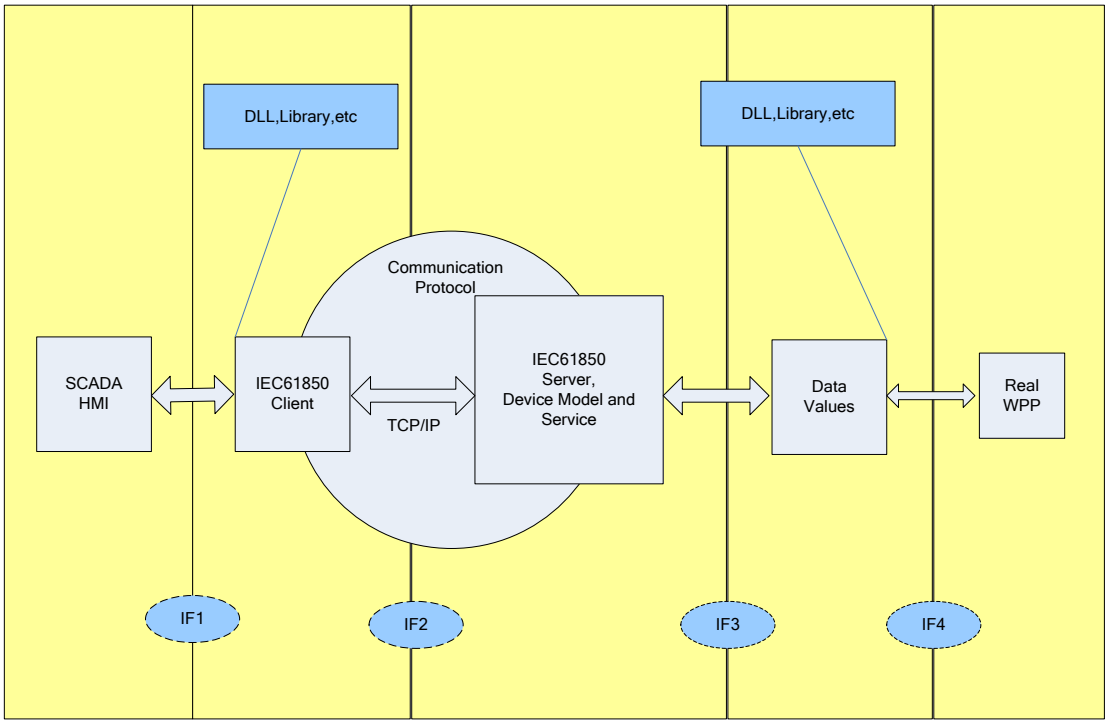

The preceding figure shows the protocol stack and interfaces of IEC61850.

IF1: API and binding

IF2: communication protocol interface

IF3: API and model-to-application data binding

IF4: obtains real data in other communication modes, for example, RS232.

IEC61850 server, device model, and services are implemented on the switch to achieve IEC61850-based information modeling management.

Service Mapping

The MMS provides the information modeling methods and services required by ACSI.

Map the services defined in IEC61850-7-2 to MMS services.

The following table lists the MMS objects and services used in IEC61850-8-1.

MMS Object	IEC61850 Object	Applied MMS Service
Application Process Virtual Manufacturing Device (VMD)	Server	Initiate Conclude Abort Reject Cancel Identity
Named Variable Objects	Logical Nodes and Data	Read Write InformationReport GetVariableAccessAttribute GetNameList
Named Variable List Objects	Data Sets	GetNameVariableListAttributes GetNameList DefineNamedVariableList DeleteNamedVariableList Read Write InformationReport
Journal Objects	Logs	ReadJournal InitializeJournal GetNameList
Domain Objects	Logical Devices	GetNameList GetDomainAttributes StoreDomainContents
Files	Files	FileOpen FileRead ObtainFile FileClose FileDirectory FileDelete

Protocol Packet

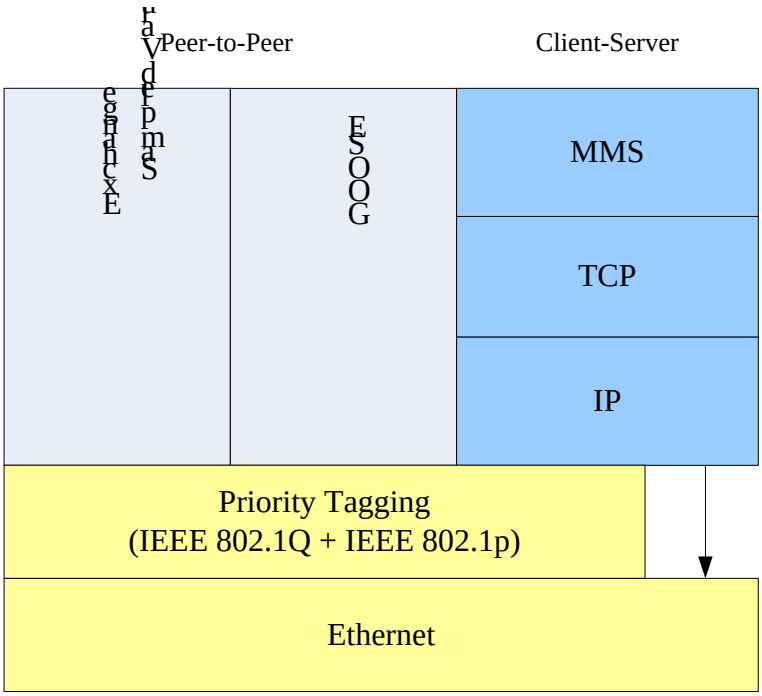

IEC61850 has defined multiple packet types:

-Type 1 (Fast messages)

-Type 1A (Trip)

-Type 2 (Medium speed messages)

-Type 3 (Low speed messages)

-Type 4 (Raw data messages)

-Type 5 (File transfer functions)

-Type 6 (Time synchronization messages)

GOOSE (Type 1) and SV (Type 4) messages are based on Ethernet data packets, while core ACSI services (Type 2, 3, and 5) are based on TCP/IP packets.

Configuration Description

On the switch, multiple files are required to complete the configuration of IEC61850 Modeling Management.

- iec61850_startup.cfg

It is an input file of IEC61850.

The file is the configuration file of IEC61850. It defines the guiding configuration for resolving SCL files.

The file adopts the Name"space+"Value format. "space+" indicates one or multiple spaces.

Item	Sample Value	Description
SCLFileName	sample.cid	Name of engineered IED file to be imported in the initialization of IEC61850.
IEDName	TEMPLATE	Logical device name of the local IED in the CID file.
AccessPointName	S1	AP name of the local IED in the CID file.
ReportScanRate	2.0	Interval for report scanning, in seconds.

- IED engineering configuration file

It is an input file of IEC61850.

The file is defined in IEC 61850-6.

The specific name of the file is defined in iec61850_startup.cfg.The file is usually an SCL file with the extension of ".cid".

* cid: Configured IED Files

* SCL: Substation Configuration Language

- osicfg.xml

It is an input file of IEC61850.

The file is a configuration file for network parameters.

- datamap.cfg

It is an input file of IEC61850.

The file describes the mapping between MMS data and user data.

- datamapout.cfg

It is an output file of IEC61850.

The file describes the mapping between MMS data and user data.

3 Typical Applications

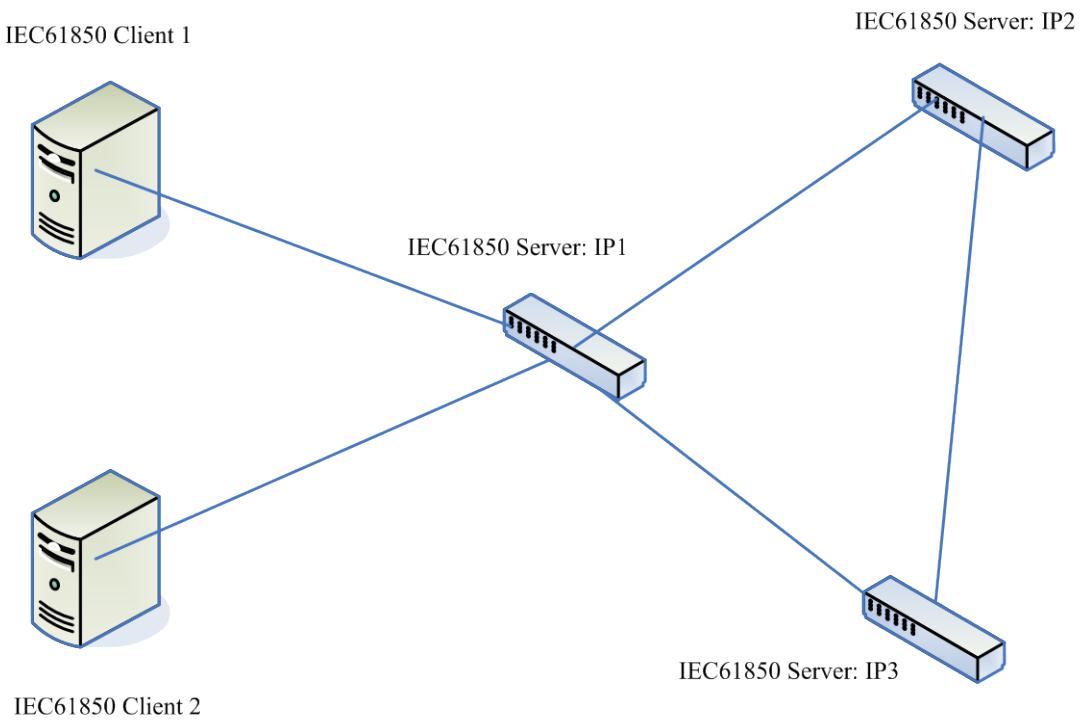

Figure 7 Typical Application

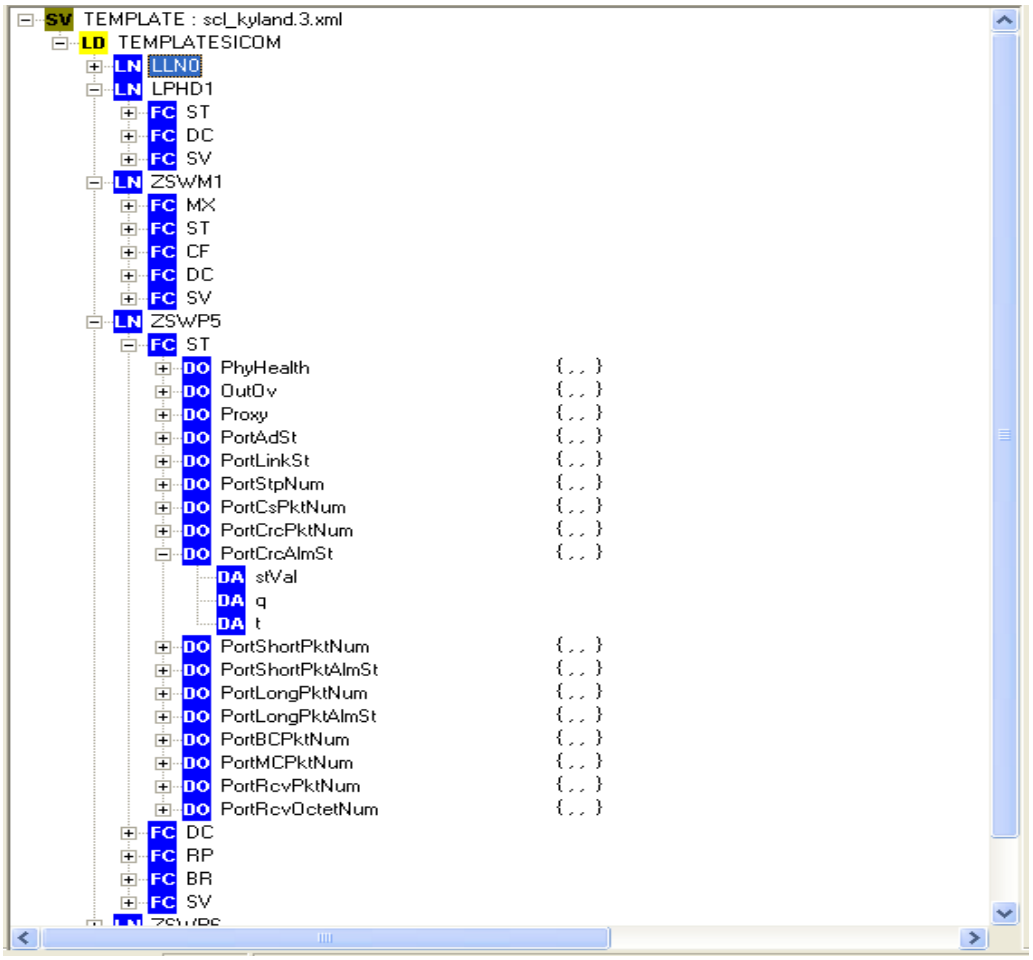

4 Prospects

With more widespread use and understanding of IEC61850, the information management model will be introduced to many other industries, such as the wind power industry. IEC61400-25 also employs information model to implement monitoring and management of wind power plants. Besides key protection, measurement, and monitoring functions, more and more monitoring systems (including the management and monitoring system for communication facilities such as industrial Ethernet switches) will be incorporated into the IEC61850 management system with its openness and interoperability. In the near future, intelligent unmanned substations and infrastructure will be a reality.

5 Reference

- IEC61850