VIBRATION MONITORING

Industrial assets require routine maintenance and repair to address wear and tear, optimize performance, and avoid potentially catastrophic equipment damage and failure. Telemetry devices that generate real-time information from industrial sensors in the field can enable advanced, intelligent maintenance strategies. Proactive and predictive maintenance bare five to ten times more cost-effective for operators than adopting alternative approaches such as run-to-failure (RTF).

By contrast, reactive maintenance approaches undertaken on a fixed, recurring schedule, irrespective of the infrastructure's actual condition, are time-consuming and almost certain to result in unnecessary and expensive deployments of technicians to the field.

Continuous Monitoring

Continuous monitoring refers to the ongoing monitoring of an industrial parameter, which can be used to detect a developing system fault before it manifests itself through a failing system. Besides being an integral part of predictive maintenance strategies, the technique can also be used to diagnose the cause of developing system issues before they threaten infrastructural continuity.

Remote Diagnostics

System diagnostics cannot be undertaken remotely without a reliable and consistent supply of information from edge assets to centralized monitoring and control systems. A well-developed remote monitoring network that extends to system end-points affords operators complete, real-time visibility over the state of their infrastructure.

Situational Awareness

A continuous stream of data from the edge ensures complete and ongoing situational awareness about the location of industrial assets. In the case of sensors that have become separated from their housings, this information can be invaluable in helping to locate them in the field.

Cost Effective

Compared to alternative maintenance strategies such as run-to-failure (RTF), proactive and predictive maintenance strategies are five to ten times more cost-effective. Even factoring in installation and acquisition costs, modern industrial monitoring systems can save operators significant sums of money through preventing unnecessary technician visits to sites.

Ayyeka provides cyber-secure, plug-and-play, remote monitoring solutions designed for various markets. Ayyeka has an installed base in challenging locations and earned a reputation for excellent customer service. Bringing together a state-of-the-art hardware and cloud-based software package, Ayyeka's solutions are leading the infrastructure monitoring sector into the future.

AYYEKA www.ayyeka.com +1 (310) 876-8040 (US) +31 (40) 209-1001 (EMEA) info@ayyeka.com

Scada & Software
From cloud-based hosting and an intuitive user-interface to secured and streamlined SCADA connectivity, Wavelet delivers data directly where it is needed. Integrating with models, analytics and business intelligence solutions has never been easier.

Cyber-Security & Alerts
Wavelet Kits are embedded in every layer from the ground up with the most advanced cyber-security technology including sensor authentication and data encryption. Receive alerts directly to your phone or email in case of an urgent event.

Rugged Design
Molded polycarbonate designed enclosure with IP 68 / NEMA 6P waterproofing rating to allow for installation in the most corossive and aggressive of environments, in both industrial and commercial applications.

Autonomous & Redundant
Low-power and predictive analysis algorithms result in up to 30% extended battery life as compared to similar technologies. Redundant communication concurrently supports 2G, 3G, CDMA, LPWAN and Bluetooth connectivity.

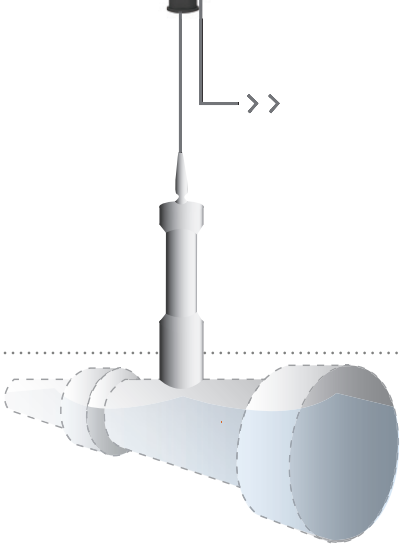

Reduced Cost Of Ownership
As an integrated, modular, and preconfigured solution that allows for plug-and-play installation and requires minimal maintenance, Wavelet Kits deliver an attractive total cost of ownership.

Rapid Deployment & Scalable
Wavelet Kits are sensor-agnostic, utilizing various configurations of sensors and samplers. Easily installed and operating within minutes, Wavelet Kits can be used to build or extend smart networks.